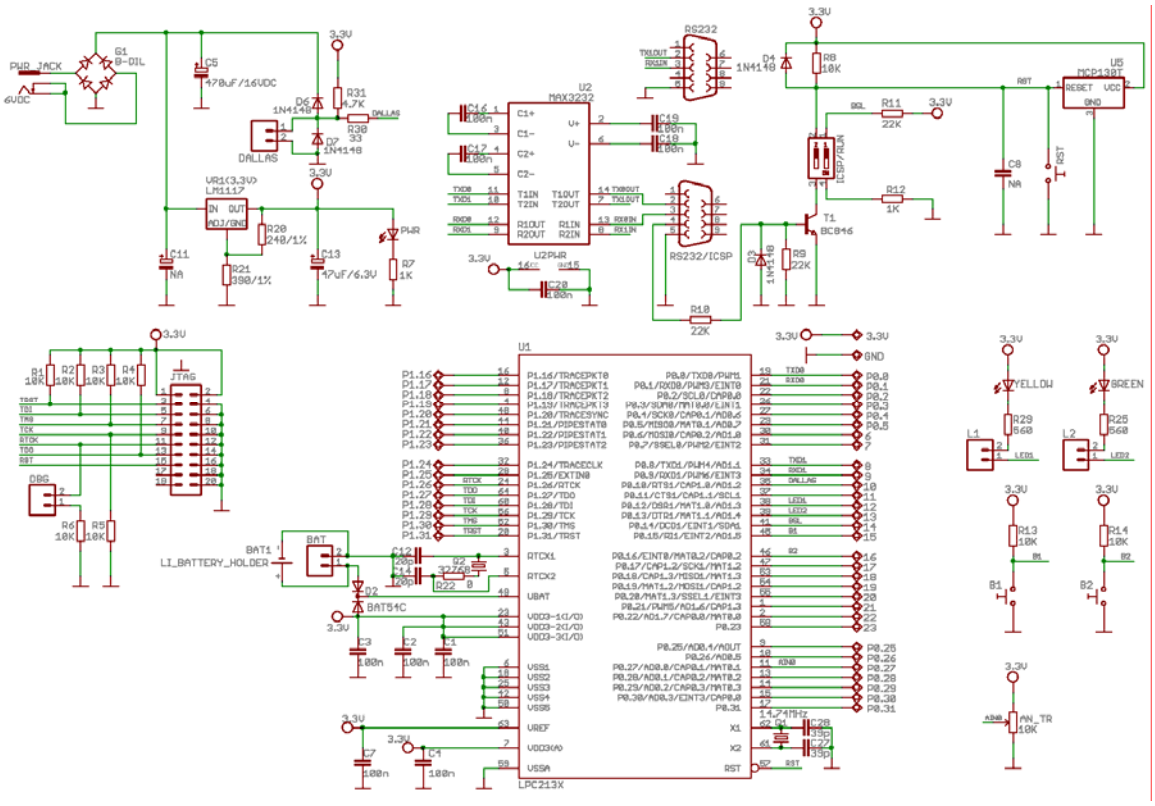

shyam shriva stav

Digitally signed by shyam shrivastav
DN: CN = shyam shrivastav, C = US, O = nexus embedded systems and design, OU = nexus embedded systems and design
Reason: I am approving this document
Date: 2007.09.22 01:55:31 -07'00'